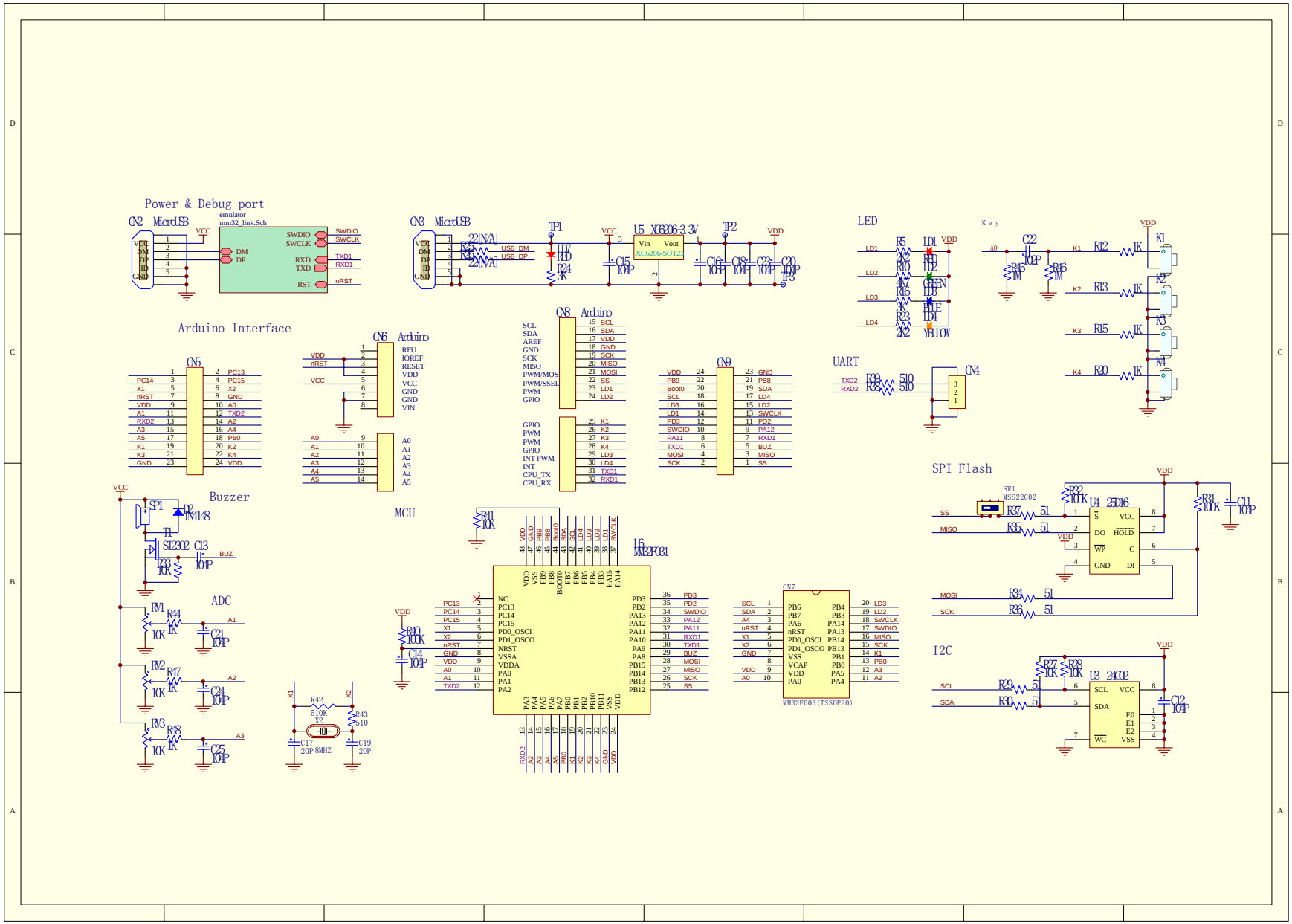
Power & Debug port
CN2 MicroUSB
emulator
mm32_link.Sch
SWDIO
SWCLK
TXD1
RXD1
nRST
CN3 MicroUSB
USB_DM
USB_DP
U5 XC6206-3.3V
Vin
Vout
XC6206-SOT23
LED
Key
UART
CN4
Arduino Interface
CN5
CN6 Arduino
RFU
IOREF
RESET
VDD
VCC
GND
VIN
CN8 Arduino
CN9
Buzzer
SP1
D2
1N4148
T1
S1202
C13
BUZ
ADC
RV1
RV2
RV3
MCU
U6
MM32F031
CN7
MM32F003(TSSOP20)
SPI Flash
SW1
MSS22C02
U4 25Q16
I2C
U3 24C02

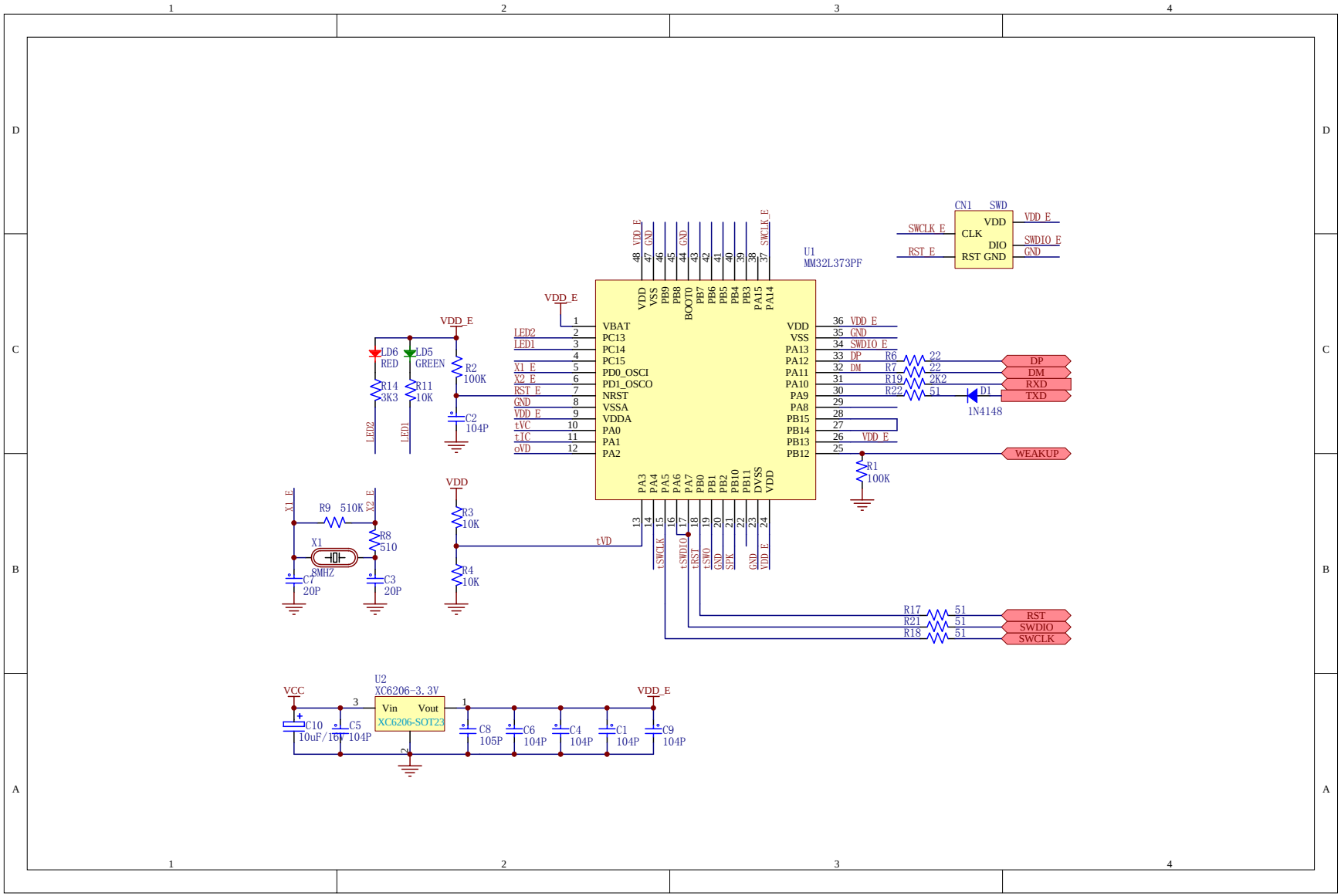
U1
MM32L373PF
VBAT
PC13
PC14
PC15
PD0_OSCI
PD1_OSCO
NRST
VSSA
VDDA
PA0
PA1
PA2
VDD
VSS
PA13
PA12
PA11
PA10
PA9
PA8
PB15
PB14
PB13
PB12
PA3
PA4
PA5
PA6
PA7
PB0
PB1
PB2
PB10
PB11
DVSS
VDD
PB9
PB8
BOOT0
PB7
PB6
PB5
PB4
PB3
PA15
PA14
LED2
LED1
X1_E
X2_E
RST_E
GND
VDD_E
tVC
tIC
oVD
tVD
tSWCLK
tSWDIO
tRST
tSWO
SPK
SWCLK_E
DP
DM
RXD
TXD
WEAKUP
RST
SWDIO
SWCLK
CN1
SWD
CLK
DIO
RST GND
SWDIO_E
LD6
RED
LD5
GREEN
R14
3K3
R11
10K
R2
100K
C2
104P
R9
510K
R8
510
X1
8MHZ
C7
20P
C3
20P
R3
10K
R4
10K
R1
100K
R6
22
R7
22
R19
2K2
R22
51
D1
1N4148
R17
51
R21
51
R18
51
U2
XC6206-3.3V
Vin
Vout
XC6206-SOT23
VCC
C10
10uF/16V
C5
104P
C8
105P
C6
104P
C4
104P
C1
104P
C9
104P